1990 Corvette: Service Bulletin: Clutch Apply Plate Material Changed to Powdered Metal

Subject: CLUTCH APPLY PLATE MATERIAL CHANGED TO POWDERED METAL
Model and Year: 1990 ALL CARS, TRUCKS, VANS WITH 4L60 (700-R4) AUTOMATIC TRANSMISSION
Source: Chevrolet Service Bulletin
Bulletin Number: 90-189-7A - (03/06/1990)

This bulletin covers a material change for the forward and 3-4 clutch apply plates. These clutches will now contain apply plates manufactured from powdered metal instead of steel.

The following dates show when changes went into effect: (Figure 1)

Apply Plate Start of Production Date

--- ---

Forward January 25, 1990 (Julian Date 025)

3-4 January 29, 1990 (Julian Date 029)

The new powdered metal plates are interchangeable with the current steel plates. Dimensions of the new powdered metal plates are the same as the steel plates. Powdered metal plates will appear darker in color than previously produced steel plates.

Part numbers have changed. (Figure 2)

Part Number Description

---------- ----------

8663785 Apply Plate - Forward Clutch (steel)

8667423 Apply Plate - 3-4 Clutch (steel)

8676059 Apply Plate - Forward Clutch (powdered metal)

8676379 Apply Plate - 3-4 Clutch (powdered metal)

When GMSPO stock of steel plates is used up, powdered metal plates will be available for service.

Parts are currently available from GMSPO.

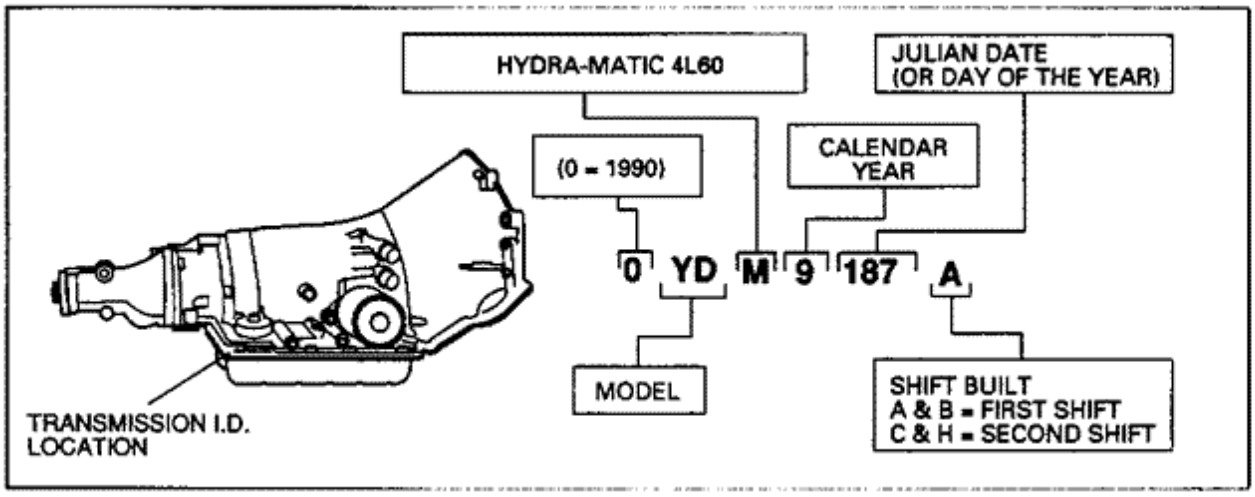

Figure 1 - THM 700-R4/HYDRA-MATIC 4L60 Transmission Identification Information

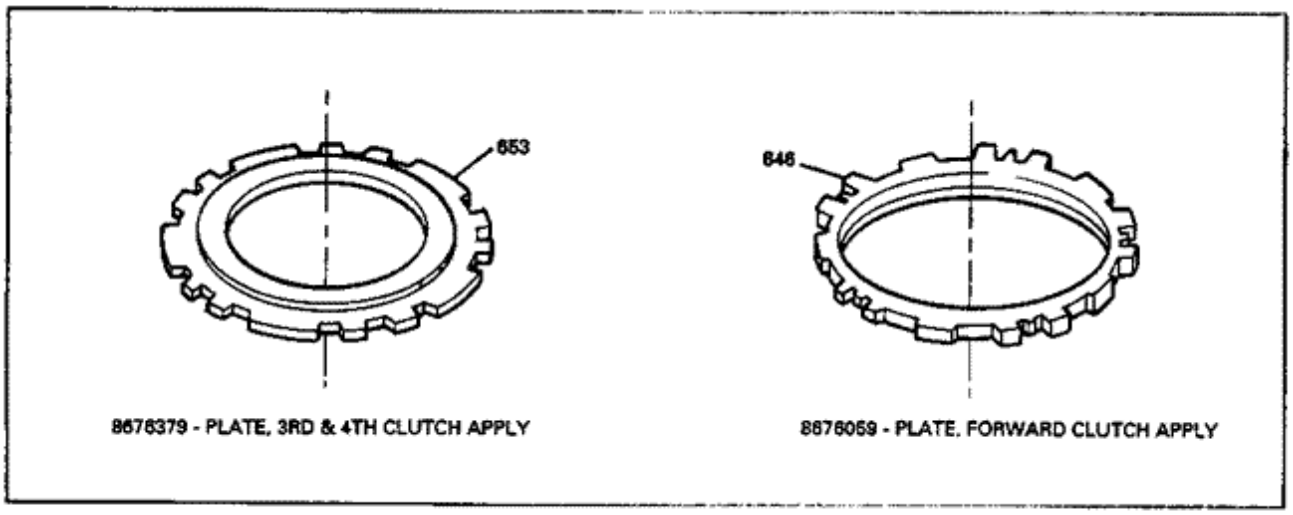

Figure 2 - 3/4 And Forward Clutch Apply Plates

General Motors bulletins are intended for use by professional technicians, not a "do-it-yourselfer". They are written to inform those technicians of conditions that may occur on some vehicles, or to provide information that could assist in the proper service of a vehicle. Properly trained technicians have the equipment, tools, safety instructions and know-how to do a job properly and safely. If a condition is described, do not assume that the bulletin applies to your vehicle, or that your vehicle will have that condition. See a General Motors dealer servicing your brand of General Motors vehicle for information on whether your vehicle may benefit from the information.

© Copyright General Motors Corporation. All Rights Reserved

Online URL:
https://www.corvetteactioncenter.com/tech/knowledgebase/article/1990-corvette-service-bulletin-clutch-apply-plate-material-changed-to-powdered-metal-598.html